6A

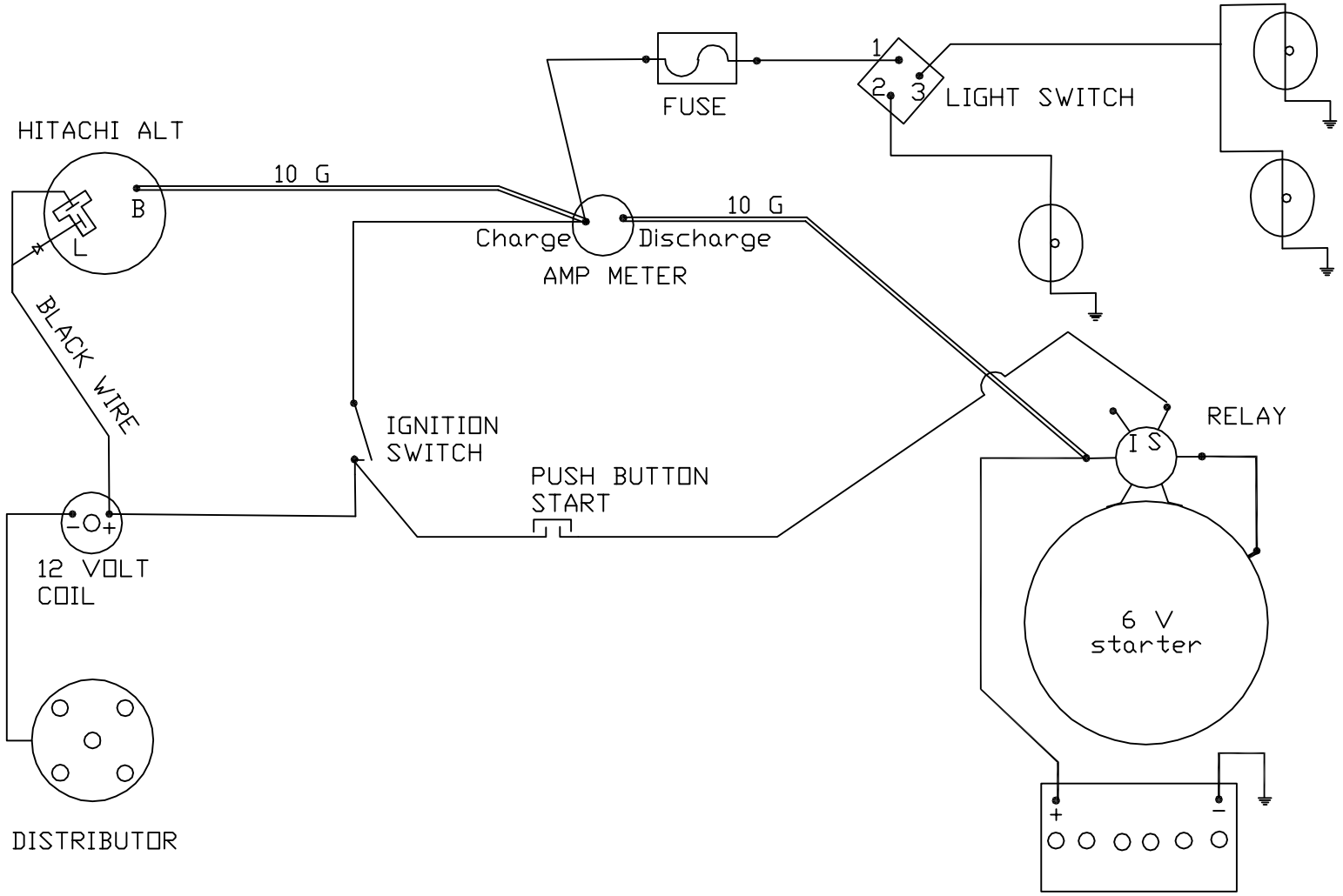

FARMALL 350/450 W/HITACHI ALTERNATOR W/12VOLT COIL

Charlie's Repair
56989 220th ST
Austin, MN 55912
507-438-8172
www.charliesrepair.com