10E

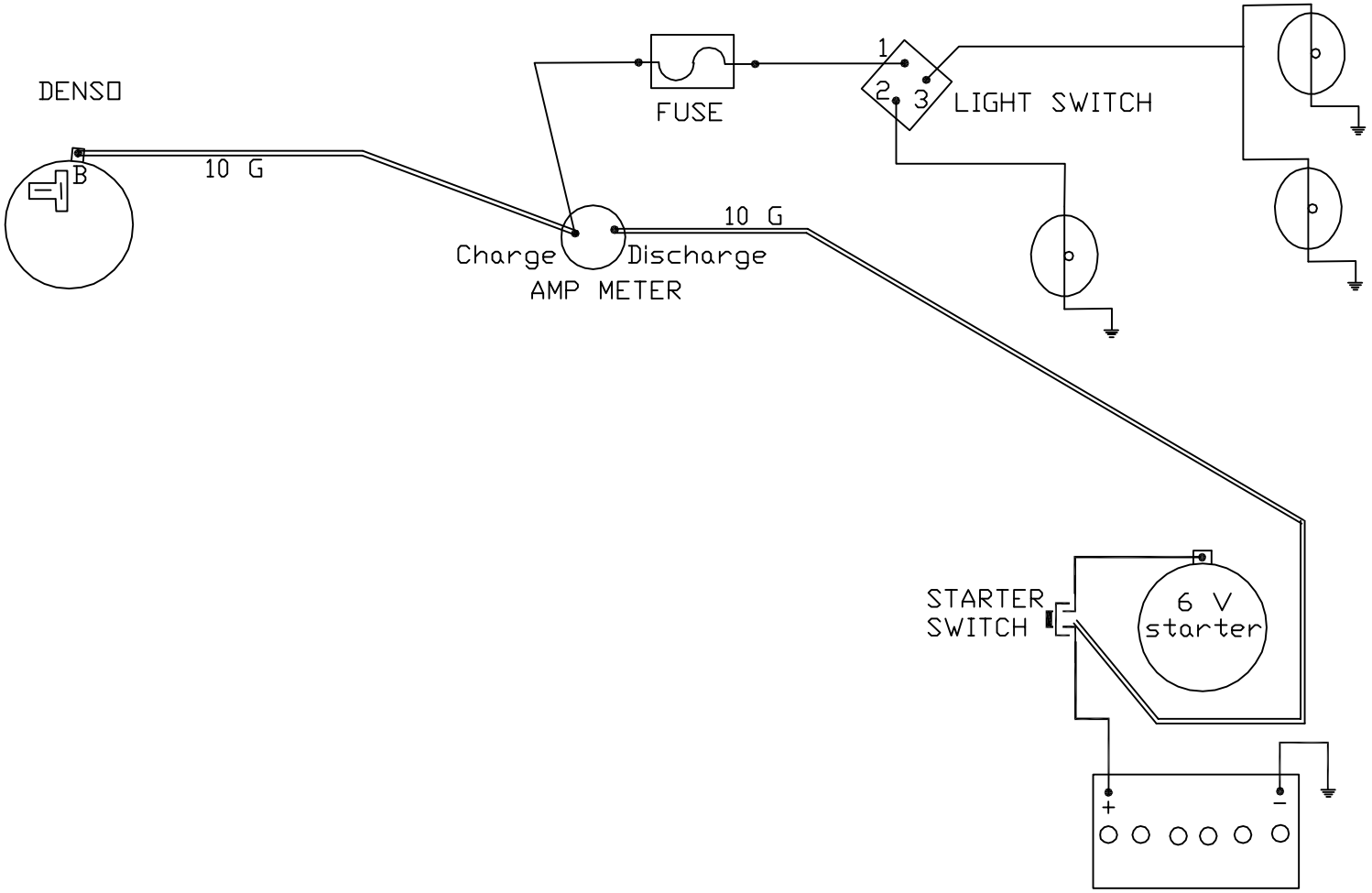

FARMALL CUB W/DENSO ONE WIRE ALTERNATOR MAGNETO EQUIPPED

Charlie's Repair
56989 220th ST
Austin, MN 55912
507-438-8172
www.charliesrepair.com